| REVISION HISTORY | | | | |
|---|---|---|---|---|
| REV | DESCRIPTION | DATE | DR BY | CH BY |
| 0 | PROTOTYPE | 05/17/12 | AFP | JO |

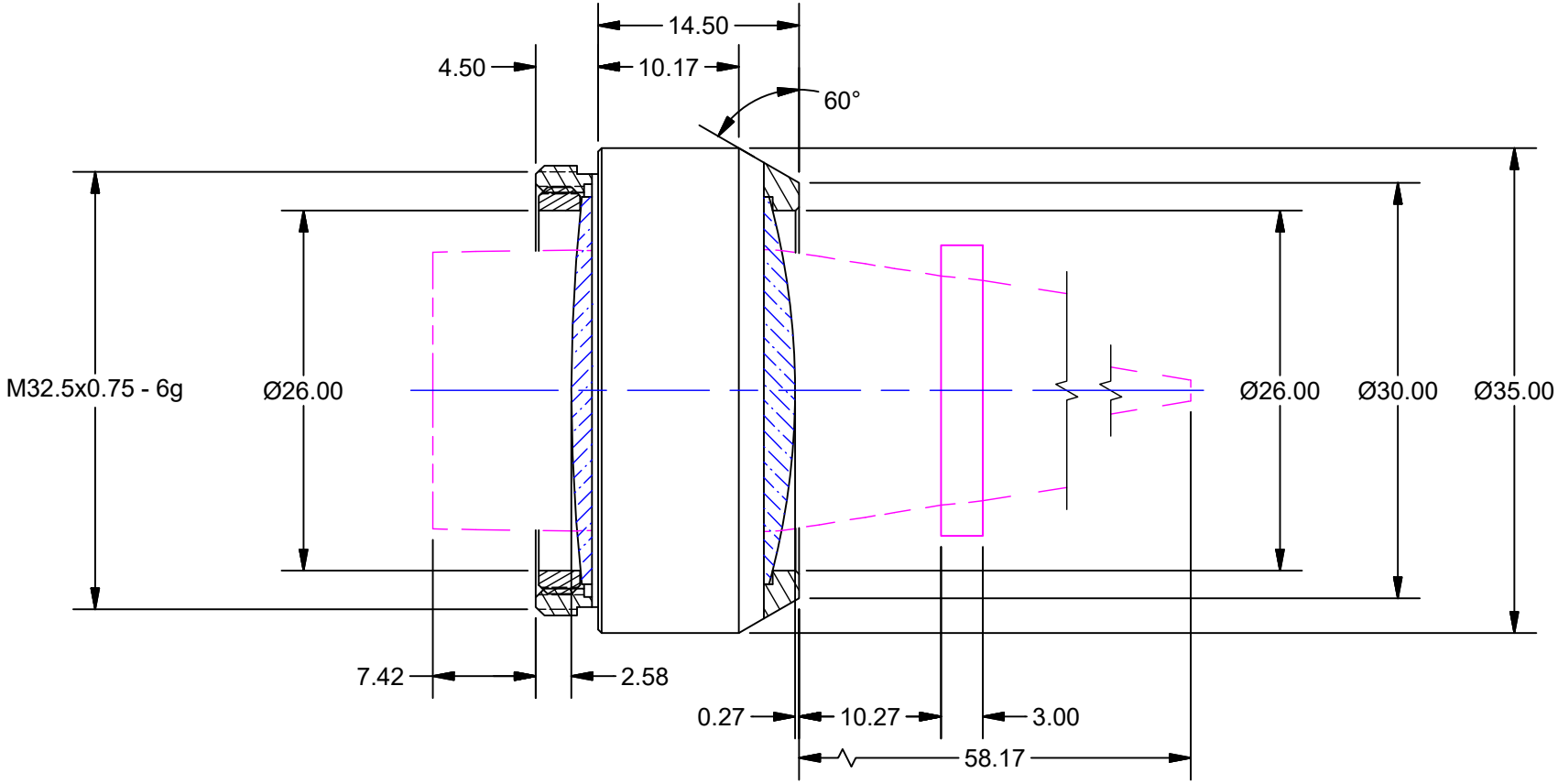


# OUTLINE

| | | | |
|---|---|---|---|
| UNLESS OTHERWISE SPECIFIED DIMENSIONS ARE IN MILLIMETERS AND INCLUDE CHEMICALLY APPLIED OR PLATED FINISHES | | **PROPRIETARY AND CONFIDENTIAL** THE INFORMATION CONTAINED IN THIS DRAWING IS THE SOLE PROPERTY OF SPECIAL OPTICS. ANY REPRODUCTION IN PART OR AS A WHOLE WITHOUT THE WRITTEN PERMISSION OF SPECIAL OPTICS IS PROHIBITED. | SPECIAL OPTICS A NAVITAR COMPANY |
| SCALE: | 2:1 | | |
| WEIGHT: | 47.06 g | 0.0 inch 1.0 | ASSEMBLY 54-20-60 @ 635 & 1550nm |
| DR BY: | AFP | | |
| CH BY: | JO | 0.0 mm 25.0 | |
| PROJECT #: | | DO NOT SCALE DRAWING | SIZE A / PART NUMBER 1-21937 / REV 0 |
| DATE DR: | 5/17/2012 | | |